THIS DRAWING OR IT'S CONTENTS MUST NOT BE REPRODUCED FOR ANY PURPOSE WITHOUT WRITTEN PERMISSION FROM DELMEC ENG. LTD. IT IS TO BE USED ONLY FOR THE PURPOSE FOR WHICH IT IS SUPPLIED.

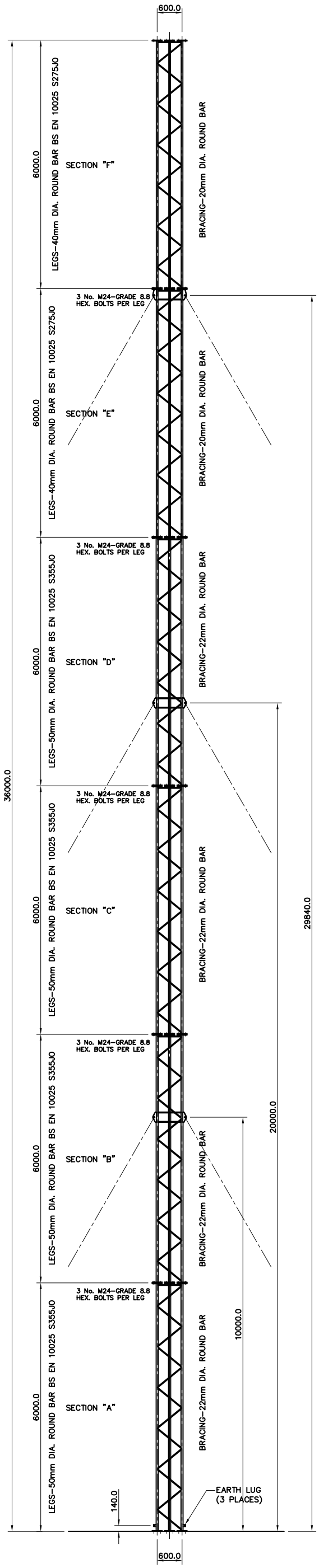

MAST ELEVATION

THIS IS TYPICAL OF 2 No. FACES
FOR CLARITY, BRACING ON OTHER FACES NOT SHOWN

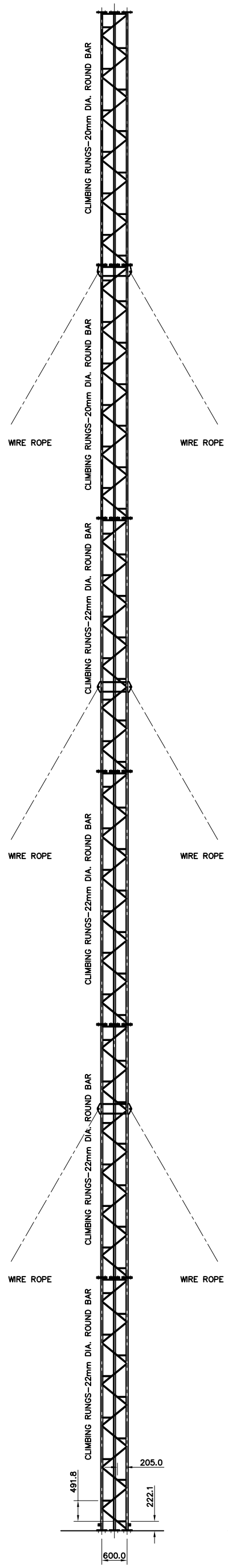

MAST ELEVATION

THIS IS THE CLIMBING FACE
FOR CLARITY, BRACING ON OTHER FACES NOT SHOWN

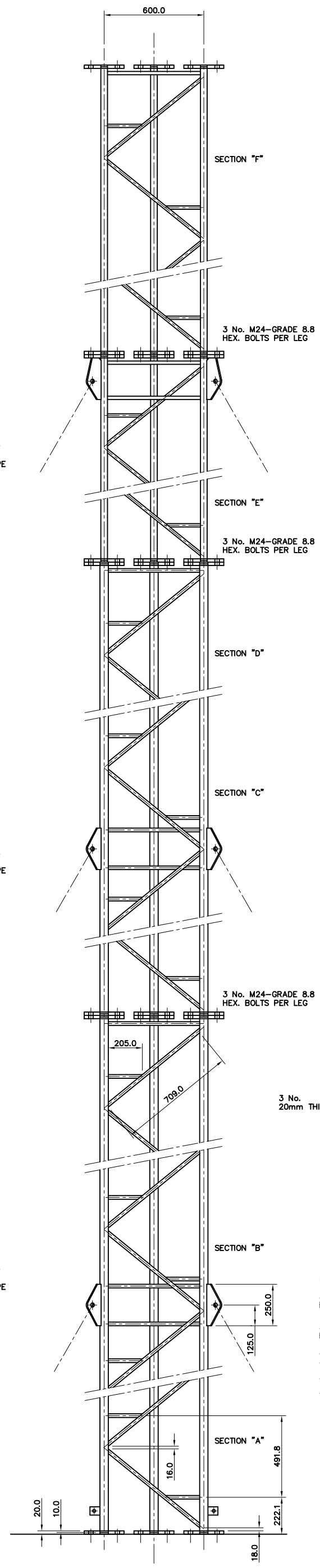

3 No. M24–GRADE 8.8 ANCHOR BOLTS PER LEG

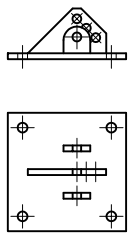

STAY ANCHOR W/A

9 No. REQUIRED

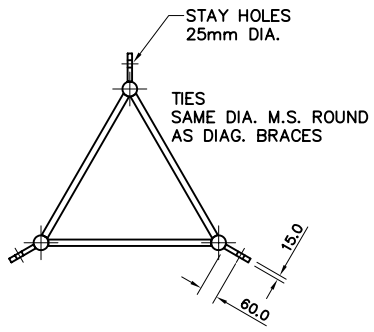

STAY & TIE BKTS.

AT CENTRES SHOWN ON ELEVATIONS

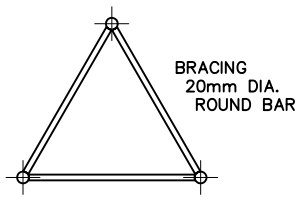

LEGS–40mm DIA. ROUND BAR

DIAGONAL BRACING

SECTIONS E & F

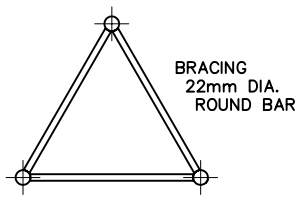

LEGS–50mm DIA. ROUND BAR

DIAGONAL BRACING

SECTIONS A, B, C & D

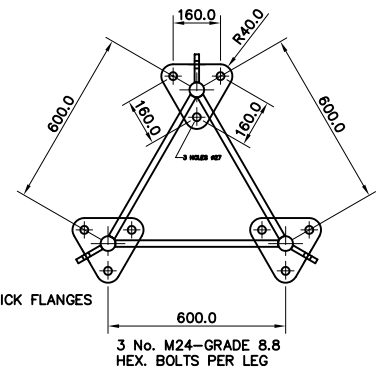

FLANGED JOINTS

AT 6M CENTRES

NOTE:

ALL LEGS IN SECTIONS A,B,C & D
BS EN 10025 S355JO

ALL BRACING IN SECTIONS A,B,C AND D
BS EN 10025 S275JO

ALL LEGS AND BRACING IN SECTIONS E & F
BS EN 10025 S275JO

ALL FLANGES, LUGS AND FIXING–PLATES
BS EN 10025 S275JO

ALL WELDS SAME GRADE AS MATERIAL TO BE WELDED
ALL WELD JOINTS TO BE FULL STRENGTH OF MAIN MEMBER

ALL COMPONENTS HOT DIP GALVANISED AFTER FABRICATION

ALL FASTENERS GRADE 8.8

Rev	Description	By	Date
A	CHANGE BRACING MEMBERS IN A,B,C,D TO GRADE S275	P.O.B	11/01/05
0	ORIGINAL ISSUE	P.B.	13/12/04

DELMEC
ENGINEERING LIMITED
O'BRIEN ROAD.
CARLOW.
REP. OF IRELAND.
MECHANICAL ENGINEERING AND STEEL FABRICATION SPECIALISTS
Tel +353–59–9143059 Fax +353–59–9143501 E.MAIL delmec@eastclear.ie

Project:
DELMEC – 5 OPERATOR – 36M STAYED MAST

Drawing Title:
MAST GENERAL ARRANGEMENT

Drawn:	Date:	Sht. Size:	Scale:	Cad Ref:	Checked:
PByrne	13/12/04	A1	1 : 50	208037–G01	K.D.

Project No:	Drawing No:	Revision No:
208037	208037–1–G01	0 A